DIN - DEPARTMENT OF INDUSTRIAL ENGINEERING

PhD Course in Mechanics and Advanced Engineering Sciences (DIMSAI)

PHD STUDENT POSTER - AY *2016/2017* Curriculum number *2* Cycle *XXXI*

Candidate: *Luca Luzi* **Supervisor:** Vincenzo *Parenti Castelli*

Six degrees of freedom over-constrained manipulator: direct position, singularity and workspace analysis

INTRODUCTION

The Gough-Stewart (GS) platform is the most widely known parallel robot. Its close-loop structure makes this manipulator uniquely suitable, with respect to a serial manipulator, for those applications in which a high stiffness is required and high loads are acting on the movable platfom. On the other hand, however, it features a smaller workspace, due to the possible collision of the components of the manipulator. In recent years, several architectures based on this manipulator were developed. We propose a new manipulator based on the GS platform that features some improvements with respect to the previous architectures.

The manipulator is an **over-constrained** modified Gough-Stewart (GS) platform and is composed by (Fig 1.a and Fig 1.b):

- a moving platform (1);
- a fixed base (2);
- three **kinematic chains** (CK).

Each kinematic chain is composed by two actuators (4, 5) connected to the fixed base by means of Universal joints and to the mobile platform by means of the "locator pivot" joint (9); when the actuators are locked the CK can be seen as a four bar mechanism. The main feature of the CK is that the fixed axes of the universal joints are **collinear** two by two and the other axes are all **parallel** and **orthogonal** to the previous two.

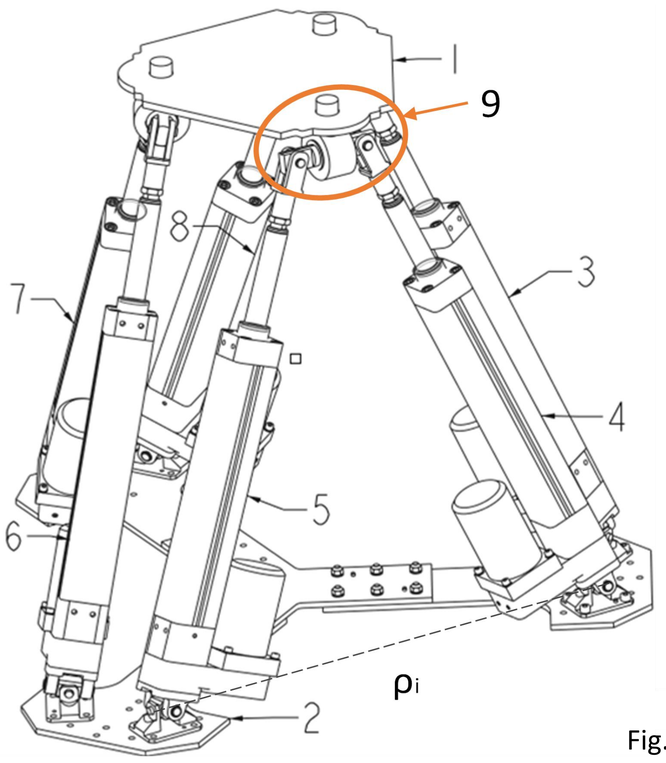

Fig. 1.a Tridimensional representation of the manipulator

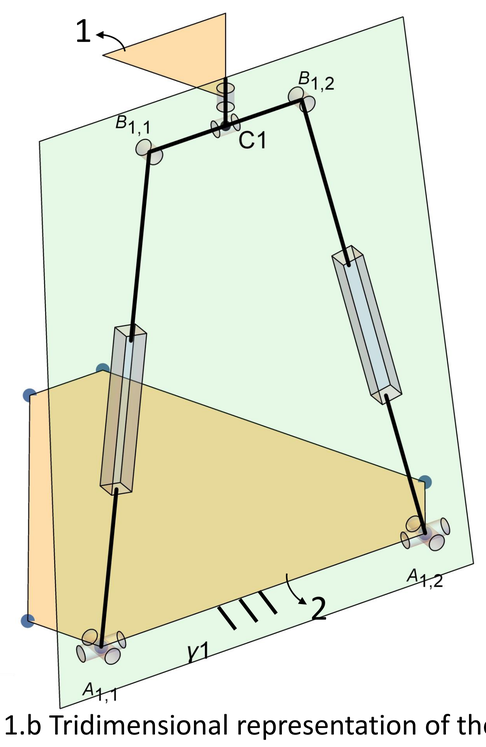

Fig. 1.b Tridimensional representation of the kinematic chian

METHODS

The direct position analysis (DPA) problem is to find the configuration of the mobile platform, given the lengths of the legs. The closure equations of the mechanism have been found relying upon a technique, known as "open loop chain", that was used to solve the DPA of many mechanisms. Differently from the classical approach, using **a four angles** parametrization (Fig 1.c), the core of the DPA, for this manipulator, can be reduced to a system of four equations in four unknowns. Moreover, singularity and workspace analysis were conducted.

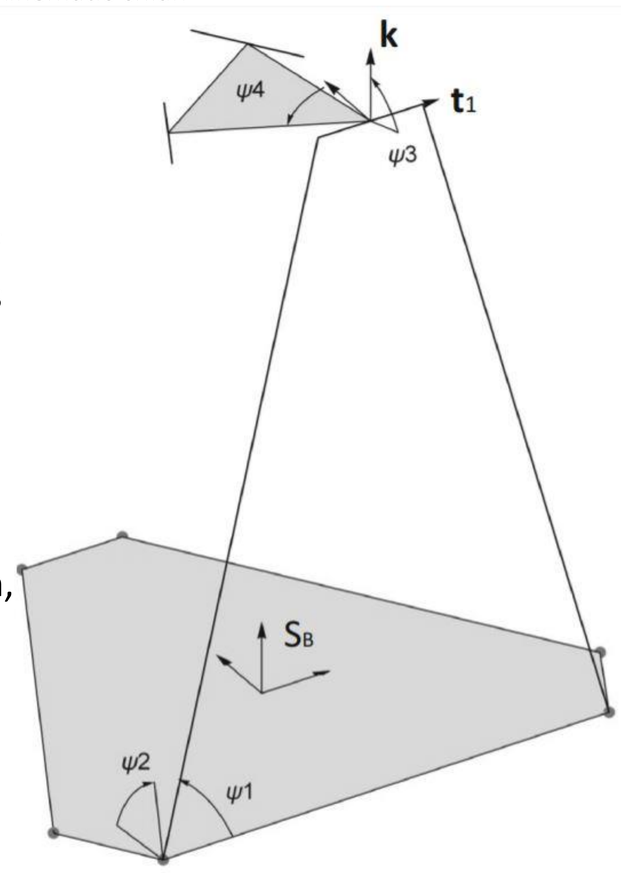

Fig. 1.c Four angles parametrization

RESULTS

The adopted parametrization leads to a 4x4 Jacobian matrix, and let us better understand some singularity configurations (shown in the following figures).

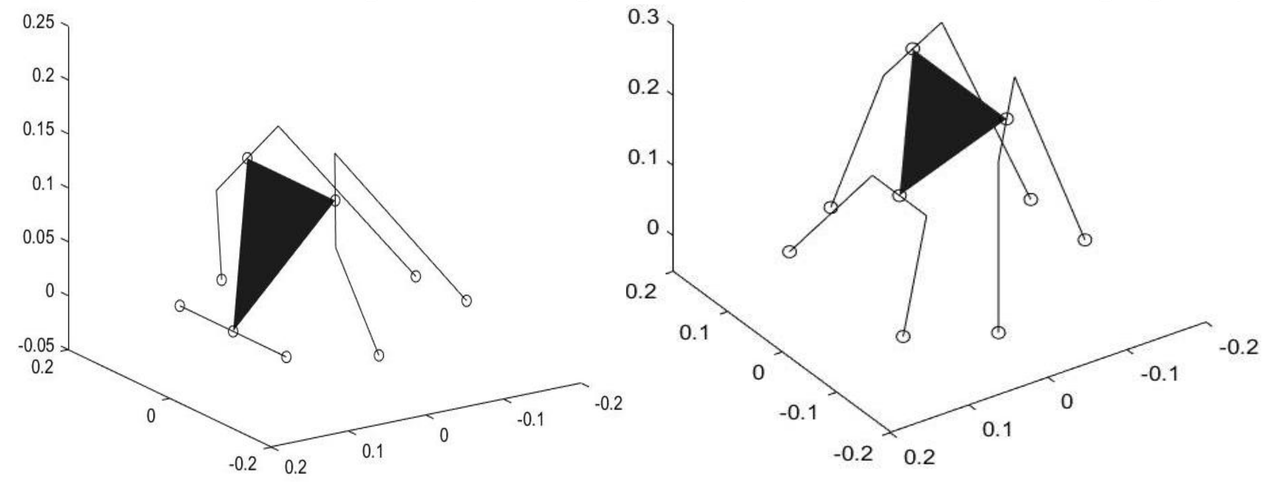

Thereafter a numerical singularity analysis is shown for a manipulator geometry typical of practical applications: the singular surfaces are obtained for some orientations of the mobile platform (shown in the following figures).

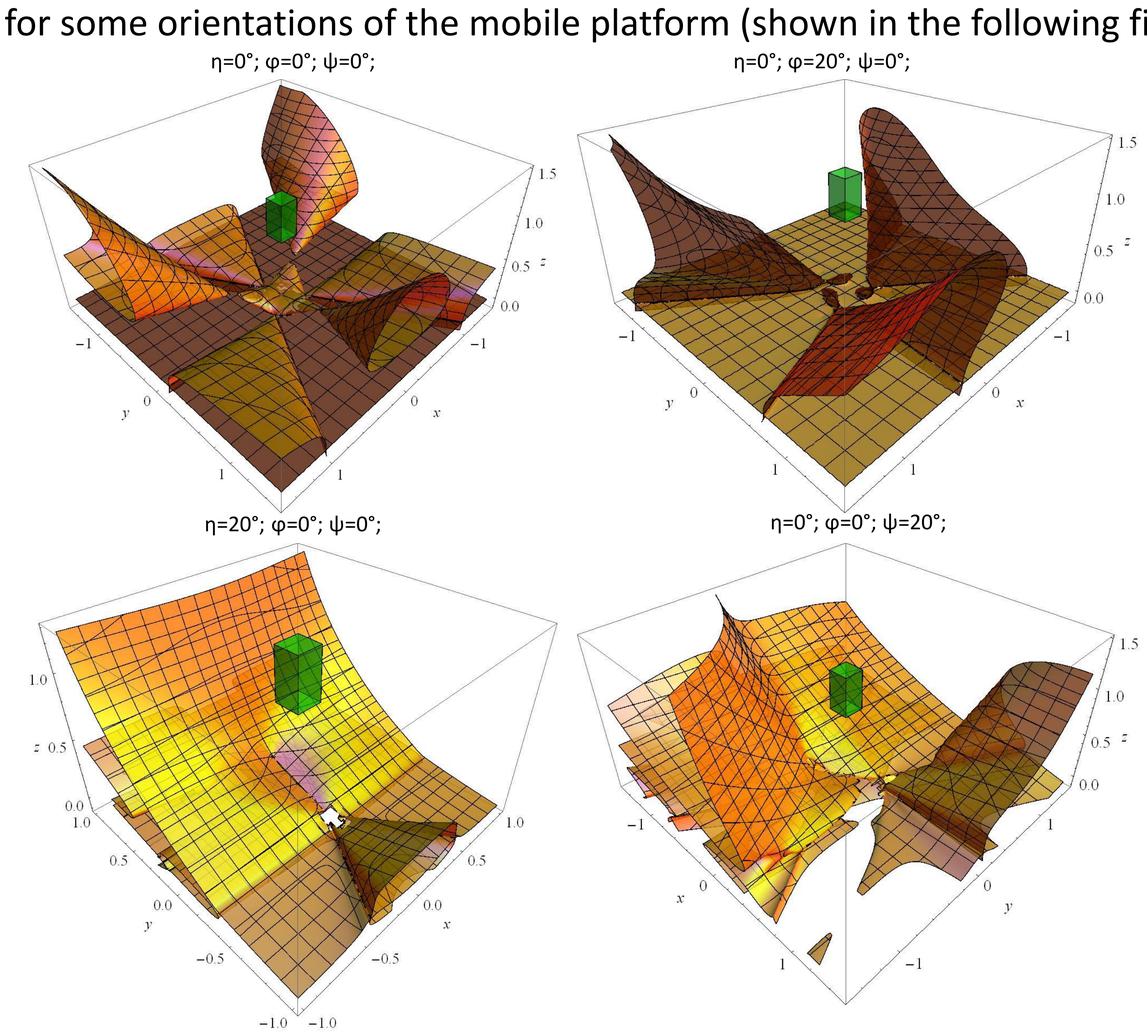

For some orientations of the mobile platform, the workspace is defined and compared to a rather large space free from singularities for the same rotations (as shown in following figures), which shows the potential of this machine in practical application.

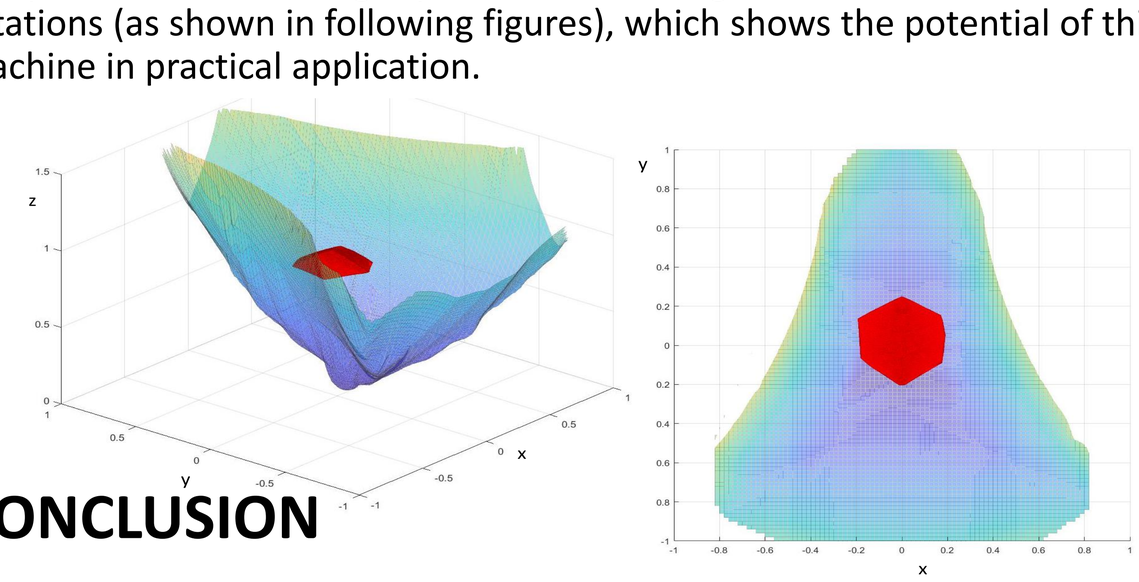

CONCLUSION

- the over-constrained manipulator are known for their **higher stiffness** and, thus, **higher precision**;
- the architecture is such that it **simplifies** considerably the design process;
- the numerical results show a **free from singularity workspace** for the platform orientations analysed (those of typical applications).

ALMA MATER STUDIORUM - UNIVERSITÀ DI BOLOGNA

IL PRESENTE MATERIALE È RISERVATO AL PERSONALE DELL'UNIVERSITÀ DI BOLOGNA E NON PUÒ ESSERE UTILIZZATO AI TERMINI DI LEGGE DA ALTRE PERSONE O PER FINI NON ISTITUZIONALI