DIN - DEPARTMENT OF INDUSTRIAL ENGINEERING

PhD Course in Mechanics and Advanced Engineering Sciences (DIMSAI)

PHD STUDENT POSTER - AY *2016/2017* Curriculum number *0000769956* Cycle *XXXI*

Candidate: *Yi Chen* **Supervisor:** *Rocco Vertechy*

FATIGUE LIFE CHARACTERIZATION OF DIELECTRIC ELASTOMER TRANSDUCERS

INTRODUCTION

- Dielectric elastomer transducers (DETs) are highly deformable capacitors for actuator, sensor and generator applications.
- Life time is a crucial design limit for practical application of DETs. The operation of DET includes cyclic mechanical and electrical loading, both of them will cause the fatigue of the material that leads to failure. Thus the design of DET is a compromise between performance and reliability.
- Few results have been reported about lifetime of DETs today. According to [1], the lifetime of DET is mostly affected by applied electric field and ambient conditions, and only secondarily by strain.
- More experiments are needed for systematically exploring the effect of electric field on life time of DETs.

Actuators based on DETs

Ocean wave energy converter based on DETs

OBJECTIVES

- Propose and implement an experimental setup to characterize the effect of operation conditions (electric field, strain, material size etc.) on life time of DETs with several kinds of material.
  - Need to test multiple specimens at once: Electrical breakdown of DETs is a stochastic process,
  - Need to perform accelerated tests to speed up testing.
- Interpret data by adopting a probability model from existing practice in the field of testing dielectric strength and fatigue lifetime of the polymeric insulation of power cables and other dielectrics.

APPROACH

- Apply square wave electric field to DET samples for reproducing electric condition that similar to practical application.
- Adopt Weibull probability distribution of electric breakdown on polymers introduced in [2],

$$P_F(E,t) = 1 - exp\left\{-\left(\frac{N}{N_c^E}\right)^a\right\}$$

$$N_c^E = N_c\left(\frac{E_c}{E}\right)^{\frac{b}{a}}$$

$$a = c + d\log(E)\,, a > 0$$

$$MCTF_E = N_c^E \cdot \Gamma\left(1 + \frac{1}{a}\right)$$

- b, c, d, E_c and N_c are parameters to be found via numerical fitting of experimental data;
- E is the amplitude of the electric field signal;
- N_c^E is called the characteristic life;
- $MCTF_E$ is the mean cycle to failure.

TEST-BENCH SETUP

- The developed test setup is based on Beckhoff controller and modules. Up to 16 identical specimens can be tested simultaneously for each bench. The specimens are under no force or displacement. The schematic and actual setup are shown below:

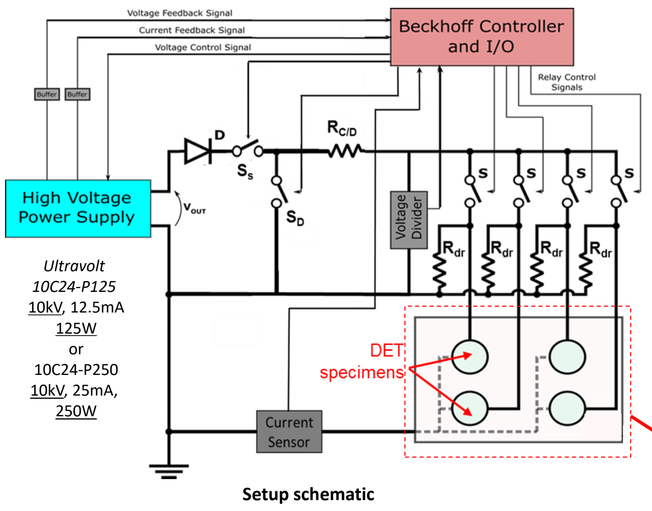

Setup schematic

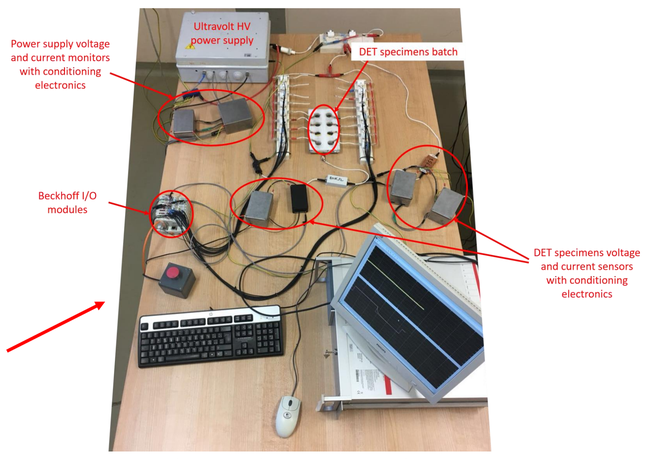

Actual setup with 8 specimens under testing

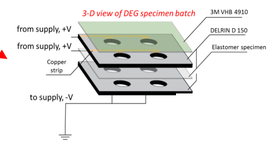

- Only 4 DETs in the above schematic for ease of representation.

PRELIMINARY RESULTS

- Four test benches have been developed.
- Tests have been performed on 3 batches (each consisting of 16 identical DETs) of a custom made styrenic rubber with different levels of electric field.
- The probabilities of failure have been approximated based on the raw life time data using Ross's method according to IEC 62539.
- The raw data and Weibull plots of the 3 batches are shown below,

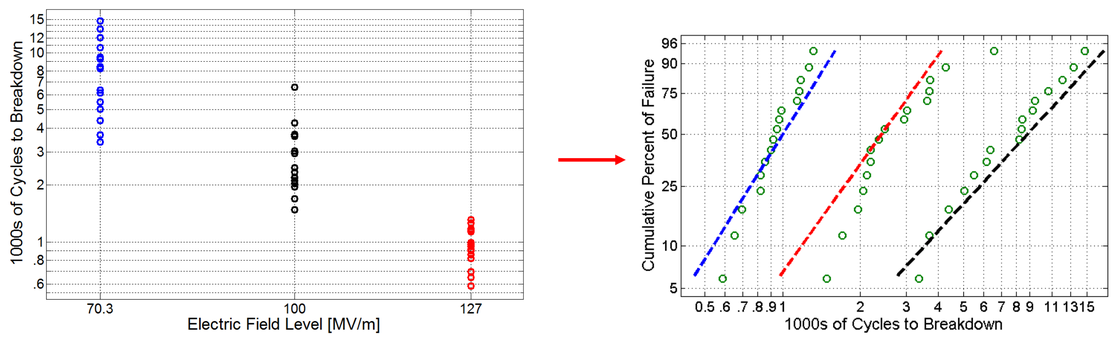

CONCLUSION/FUTURE WORK

- Strong dependency of DET life time on electric field level.
- Weibull distribution seems suitable for square wave electric field solicitation.
- Custom made styrenic rubber has a relatively good performance in the aspect of life time comparing with the acrylic elastomer reported in [1].
- Future work will consider:
  - Silicone elastomer material and commercial styrenic rubber;
  - Effect of specimen pre-stretch, size and applied electric field frequency;
  - Mixed electro-mechanical loading mimicking the practical operation of DET used as ocean wave energy converter.

Funding

1. FP7-ENERGY POLYWEC Project (ID: 309139) funded by the European Commission.
2. WES-PTO Stage 1 & 2 Project funded by the Scottish Government.

Reference

1. Kornbluh, Roy, et al. "Long-lifetime all-polymer artificial muscle transducers."MRS proceedings. Vol. 1271. Cambridge University Press, 2010.
2. Dissado, Len A., and John C. Fothergill. Electrical degradation and breakdown in polymers. No. 9. IET, 1992.

ALMA MATER STUDIORUM - UNIVERSITÀ DI BOLOGNA

IL PRESENTE MATERIALE È RISERVATO AL PERSONALE DELL'UNIVERSITÀ DI BOLOGNA E NON PUÒ ESSERE UTILIZZATO AI TERMINI DI LEGGE DA ALTRE PERSONE O PER FINI NON ISTITUZIONALI